Allan padelford Camera Cars www.apcamcars.com **Phone: 661.268.1330**

This low air ride trailer keeps picture car tires only 4”-6” off the ground. The expanding rear axel and tires allows for wide vehicles. The Fifth wheel hitch makes turns easily, up to 90 degrees truck to trailer. Designed to be pulled by the MTV, with or without the technocrane.

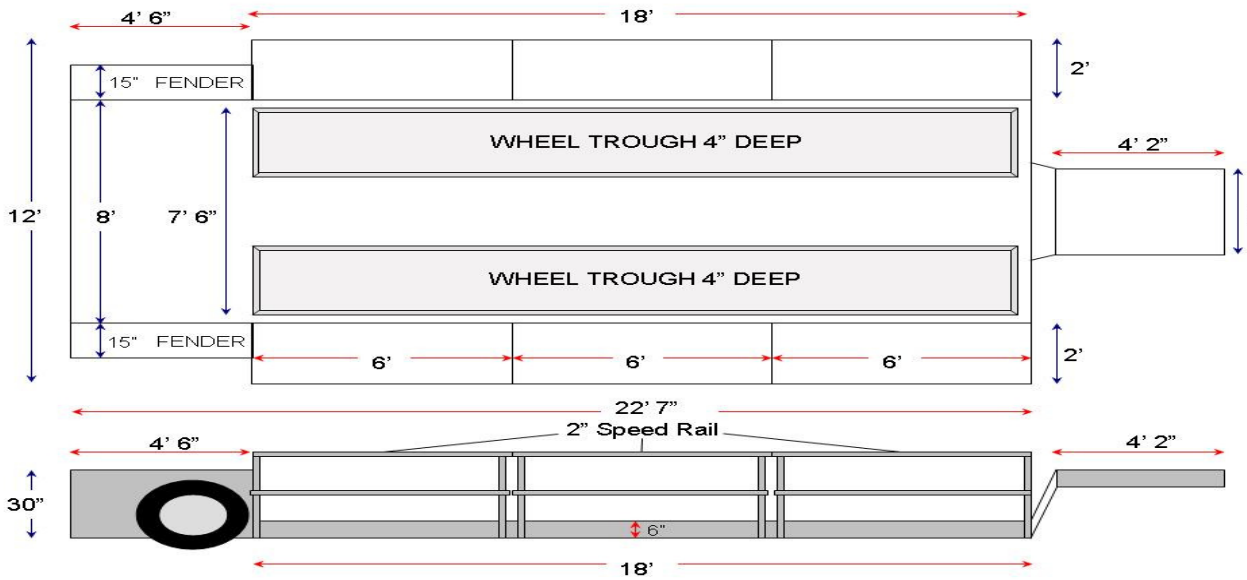

Process trailer